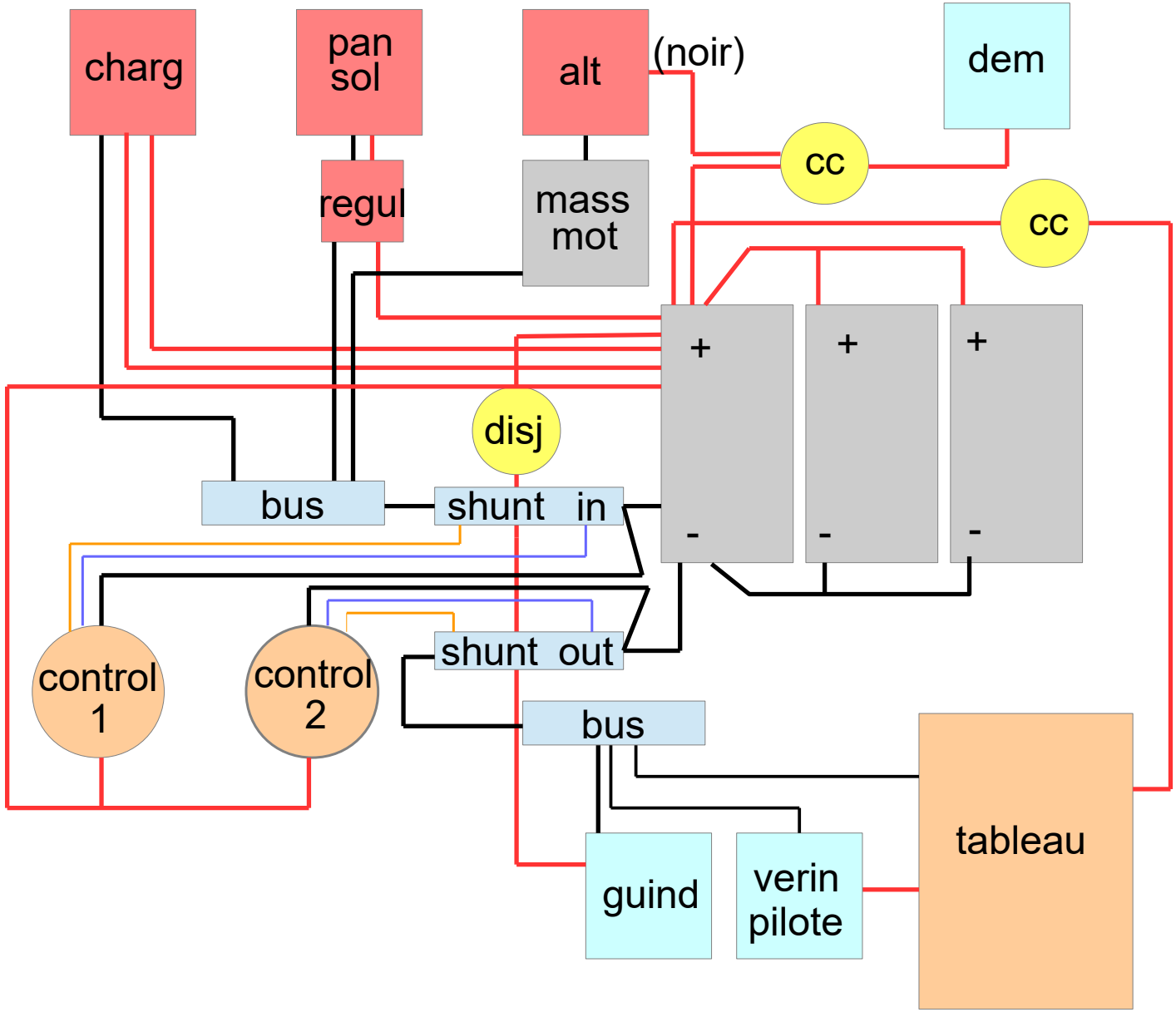
charg
pan sol
alt
(noir)
dem
cc
cc
regul
mass mot
+
+
+
disj
bus
shunt in
-
-
-
control 1
control 2
shunt out
bus
tableau
guind
verin pilote